INSTALLATION AND OPERATION MANUAL — BEARINGLESS DIGITAL TORQUEMETERS

APPLIES TO

MCRT® 81008V, MCRT® 84000V, MCRT®85000V, MCRT® 86000V AND MCRT® 87000V SINGLE RANGE SERIES

PLUS

MCRT® 81708V, MCRT® 84700V AND MCRT® 88700V DUAL RANGE SERIES

REVISION E

Customer: _____

Model Number: _____ Serial Number: _____

Factory Reference Number: _____

Rated Torque (lbf-in): _____

Low Range Torque Rating if MCRT® 81708V/84700V/88700V (lbf-in): _____

Torque Overload Capacity (lbf-in): _____

Maximum Speed (rpm): _____

Performance Code: _____

Optical Speed Pickup (Code O): ( ) Yes ( ) No Pulses/rev _____

Magnetic Speed Pickup (Code Z): ( ) Yes ( ) No Pulses/rev _____

Special Features: _____

_____

_____

Torquemeter Settings (FIS indicates Factory Installed Setting)

Torque Range [FIS = Torquemeter Full Scale]: _____

Digital Torque Output Unit of Measure [FIS = lbf-in]: _____

Digital Temperature Output Unit of Measure [FIS = °F]: _____

Torque Data Filter Cutoff Frequency (Hz) [FIS = 10 Hz]: _____

Torque Limits _____ These settings must be made by user in BLT-WIN PC Interface Software _____

Torque Full Scale Analog Output (volts)

MCRT® 81008V/84000V/86000V and MCRT® 81708V/84700V/88700V High Range [FIS = ±10 volts]: _____

MCRT® 85000V/87000V and MCRT® 81708V/84700V/88700V Low Range [FIS = ±5 volts]: _____

Torque FM Output Center Frequency (kHz) [FIS = 10 kHz]: _____

Torque FM Output Frequency Deviation (kHz) [FIS = ±5 kHz]: _____

PC to Com Port Cable Supplied: ( ) RS232 ( ) RS422 ( ) RS485

PC to Com Port Cable Length [Feet]: _____

Password Protection [FIS = Off] : ( ) On ( ) Off

Calibration Data is listed in the attached Calibration Certificate. Calibration data is automatically loaded on power up. Calibration data can also be accessed using a PC and the supplied software.

S. Himmelstein and Company

Designing and Making the World's Best Torque Instruments since 1960

2490 Pembroke Avenue, Hoffman Estates, IL 60169 USA • Tel: 847-843-3300 • Fax: 847-843-8488 • www.himmelstein.com

© 2017 S. Himmelstein and Company—all rights reserved www.himmelstein.com

TABLE OF CONTENTS

Page

i. Introduction 4

ii. Bearingless Digital Torquemeter Overview 4

iii. High Noise Immunity 4

A. Mechanical Installation 5
- A.1 Applicability 5
- A.2 Rotor Installation 5
  - A.2.1 Proximity of Rotating Metal Components to Antenna Structure 6
  - A.2.2 Proximity of Stationary Metal Components to Antenna Structure 6
- A.3 Stator Installation 6

B. Electrical Installation 7
- B.1 Applicability 7
- B.2 Stator Connectors 7
  - B.2.1 Analog Torque Output Connector Pinout 7
  - B.2.2 Input Power Connector Pinout 7
  - B.2.3 I/O and FM Output Connector Pinout 7
  - B.2.4 RS232/422/485 Connector Pinout 8
    - B.2.4.1 RS232 Connecting Cable Diagram 8
    - B.2.4.2 RS422 Connecting Cable Diagram 8
    - B.2.4.3 RS485 Connecting Cable Diagram for Multiple Torquemeters 9
  - B.2.5 Standard Interconnect Cable Part Numbers 9
  - B.2.6 RS422 /485 and USB Adapters 10
  - B.2.7 Earth Ground Connection 10

C. PC Interface Software 10
- C.1 BLT-WIN PC Interface Software Overview 10
- C.2 Change Sensor/Test Setup 11
- C.3 Display Measured Data 11
- C.4 Control Test 11
- C.5 Perform Dead Weight Calibration 11
- C.6 Calibration Intervals 11

D. Stator Keypad and Status Indicators 12
- D.1 Keypad 12
- D.2 Status Indicators 12

E. Operating and Safety Considerations 12
- E.1 Applicability 12
- E.2 Allowable Torque Loads 12
  - E.2.1 Overload Considerations 12
  - E.2.2 Fatigue Considerations 12
  - E.2.3 Starting High Inertias with Electric Motors 13
- E.3 Allowable Extraneous Loads 13
- E.4 Overrange Considerations 13
- E.5 System Warm-up 13

F. Zero Velocity Speed Pickup Options 13
- F.1 Applicability 13
- F.2 Optical (Code O) Zero Velocity Speed Pickup 13
- F.3 Magnetic (Code Z) Zero Velocity Speed Pickup 13
- F.4 Speed Pickup Pinout, Power Input and Output Signal 13

Appendices 17
- I Overrange, A Critical Rotary Torquemeter Parameter 17
- II Bearingless Digital Torquemeter Specification 20
- III Torquemeters with Extended Measuring Range 21
- IV Avoiding the Destructive Effects of Torsional Resonance 23
- V Serial Communication Commands 28

© 2017 S. Himmelstein and Company—all rights reserved

i. Introduction

ii. Bearingless Digital Torquemeter Overview

These transducers measure and output ***shaft torque, temperature and speed.*** Speed is an option; both magnetic (Code Z) and optical (Code O) versions are available. *The Torquemeters have no bearings, pots, switches or manual adjustments.* Null, scaling, units of measure, temperature compensation and user set-up selections are stored in nonvolatile memory. Rotor bridge shunt calibration verifies operation/scaling of the entire measurement chain in both the CW and CCW directions.

Torque data is simultaneously output in analog, FM and digital formats. The digital outputs include Current, Maximum and Minimum Torque. Included software operates on Windows-based PC's. It displays and plots real time data, and stores test results. It also permits the user to control the test and select test parameters as defined in the table below. Password protection may be invoked, if needed. Input power is a single, unregulated dc supply. Reverse polarity and fuse protection are standard. Elimination of slip rings, brushes, fragile ferrites, and other limited-life, noise-generating and noise as well as measured Rotor Temperature. Ten common torque units of measure may be selected without re-calibration; temperature has two. Fourteen selectable Bessel filters avoid delay distortion and overshoot and assure optimal measurement response.

These Torquemeters have industries' highest Overrange; from 150 to 300%; output selection and model dependent; see Specifications listed in Appendix II. Overrange is a critically important parameter when making rotating measurements. If a Torquemeter has no or low Overrange, very large peak and average torque errors are possible. See Appendix I for details. Susceptible elements assure accuracy and long life.

iii. High Noise Immunity

To achieve short length, high stiffness and wide signal bandwidth, Bearingless sensors use unshielded antennae. As a result, any device (including a like Torquemeter) operating at or near its carrier frequency, can cause interference and data errors.

Of special concern are Industrial, Scientific and Medical (ISM) devices. Under FCC rules, they can generate unlimited energy and field strength. High-power ISM devices are commonplace in industrial environments. Furthermore, billions of RFID tags operate at ISM frequencies. They are used for inventory control, parts tracking, controlling personnel access, etc.

Most Bearingless Torquemeters use a single ISM frequency for power and data; usually 6.78 or 13.56 mHz. As a result, they are susceptible to interference from other ISM devices. Furthermore, FCC rules permit high power/fields only in a narrow band; ±7 kHz for a 13.56 mHz device. For unlicensed use outside that band, field strength must be low; ≤ 25 μV/m at 300 meters for a 13.56 mHz carrier. Because realtime torque data transmissions are wideband, these devices risk violation of FCC regulations.

Himmelstein Bearingless Torquemeters tolerate ISM devices and other industrial noise sources. They use separate non-ISM frequencies for power and data, have field strengths within FCC rules, powerful 12 pole signal filters and near field (not radiated field) signal transfer. *Should a proprietary algorithm detect noise or interference, the system automatically shifts to a clear channel. An important benefit is the ability to install torquemeters close to each other without interference.* Those features make possible otherwise impractical installations and can yield significant space and cost savings.

Available Set-up and Control Functions

Function	Via Stator Switch	TTL I/O	Com Port
Clockwise (CW) Rotor Shunt Calibration*	✓	✓	✓
Counterclockwise (CCW) Rotor Shunt Calibration*	✓	✓	✓
Tare Torque	✓	✓	✓
Clear Tare	×	✓	✓
Reset Max/Min Memories – I/O Line is Range Toggle for 81708V/84700V/88700V	×	✓	✓
Select Torque Filter Cutoff Frequency	×	×	✓
Select ±5 or ±10V Analog Output	×	×	✓
Select FM Center Frequency	×	×	✓
Set Torque Limits	×	×	✓
Reset Torque Range	×	×	✓
Select Torque and Temperature Units of Measure	×	×	✓
Define Password & Turn It On/Off	×	×	✓

* NIST traceable calibration performed in our accredited Cal Lab (NVLAP LAB Code 200487-0). For details visit www.himmelstein.com or www.nist.gov.

© 2017 S. Himmelstein and Company—all rights reserved

A. Mechanical Installation

A.1 Applicability

This discussion is applicable to all MCRT® 81008V, 84000V, 85000V, 86000V, 87000V, 81708V, 84700V and 88700V Series Devices.

A.2 Rotor Mechanical Installation

The Rotor is installed between the driven and driving member. It may be bolted to either. The torsion load should be carried by face friction rather than bolt shear. To accomplish that and avoid slippage, use eight Socket Head Cap Screws with tensile strength ≥ 170,000 psi (1,200 Mpa), i.e. Unbrako or equal. They should be tightened in accordance with the tabulated torque values.

MCRT® Series	High Strength Socket Head Cap Screws	Tightening Torque (lbf-ft)
8___2V	1/4 – 20	17
8___4V	7/16 – 14	100
8___7V	3/4 – 10	500
8___8V	7/8 – 9	700
8___9V	1 1/4 – 7	2080
8__10V	1 1/2 – 6	3600
81__8V	M20–2.5	650 Nm

Inevitably, the driving and driven shafts won't be perfectly aligned and they also have runout. Bolting a Torquemeter rotor to either increases its shaft length. The resultant extended shaft will have somewhat increased runout and misalignment but is otherwise equivalent to the set-up without the Torquemeter installed. **Therefore, like the set-up before Torquemeter installation, a flexible coupling is required between the installed Torquemeter rotor and the second user flange.**

Assuming both the driving and driven shafts are foot-mounted, there will be angular and parallel misalignment between them. A double flex coupling is required to accommodate such misalignment. That coupling should carry torque, speed and allowable misalignment ratings (angular, parallel and end float) consistent with the application. See Figure 1 which illustrates a typical, short coupled installation. If a U-joint coupled drive shaft is used, its U-joints must be correctly phased.

Figure 1. Typical Rotor Installation with Flexible Coupling

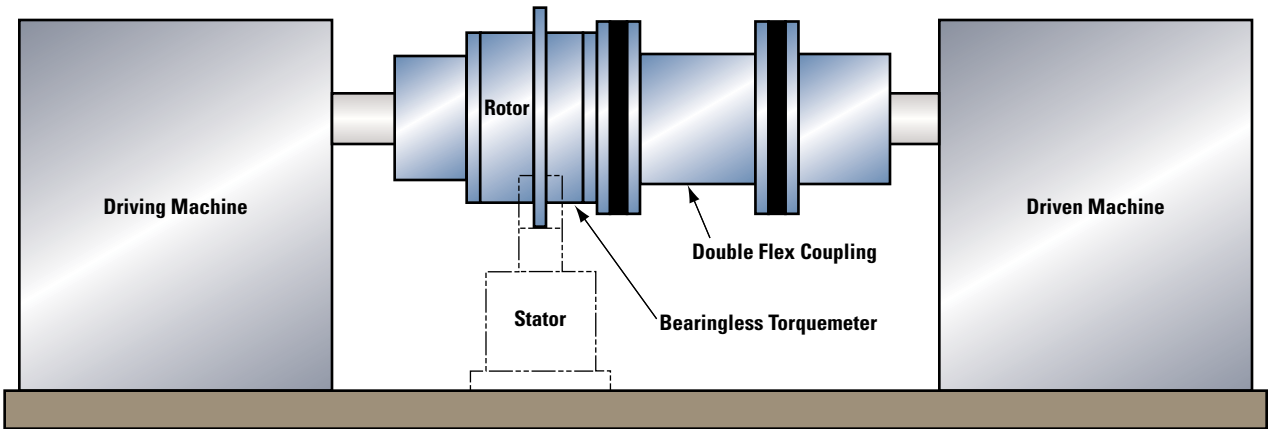

OBSERVE THE FOLLOWING INSTALLATION PRECAUTIONS

- **Use alloy steel mating flanges hardened to Rc 40 and flat to within 0.001 inch.**
- **Thoroughly clean mating flange faces before assembly.**
- **Use the same type and grade bolts to attach the torquemeter coupling flange to its mating flange. They should be tightened with the tabulated torque.**
- **Use loctite (or equivalent) to prevent bolt loosening.**
- **Dynamically balance *the assembled driveline* for high speed operation.**

WARNING

If any driveline part fails, dynamic balance is lost, and the resultant forces can cause other part failures. Therefore, it is an essential safety requirement that a safety cover, substantial enough to contain any separated mass, be used.

© 2017 S. Himmelstein and Company—all rights reserved

Figure 2. Acceptable Installation

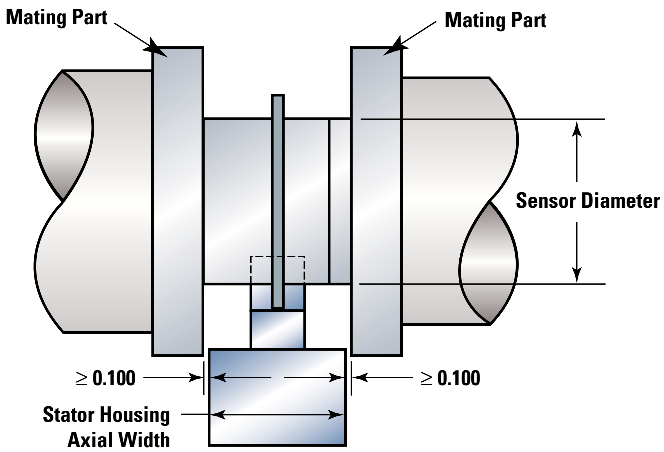

Figure 3. Unacceptable Installation

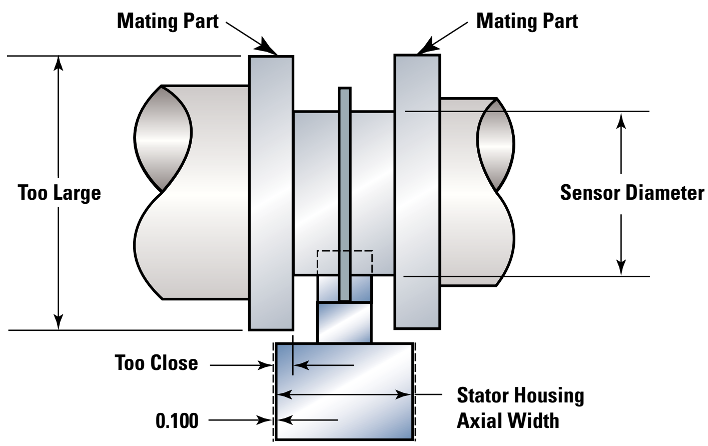

Figure 4. Recommemded Rotor–Stator Alignment

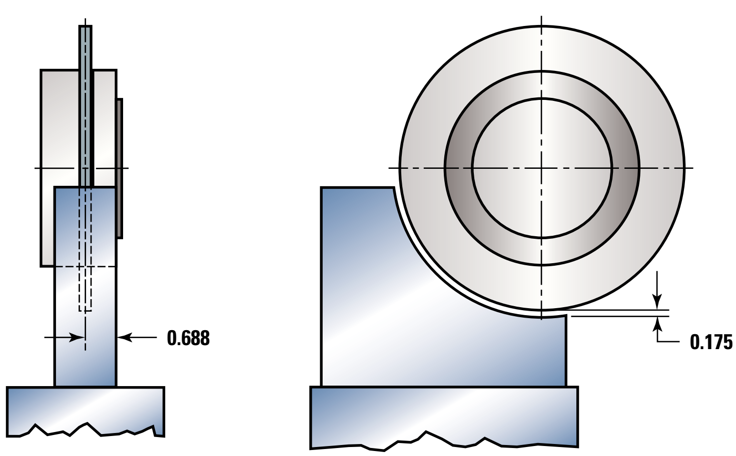

A.2.1 Proximity of Rotating Metal Components to Antenna Structure

Space metal parts at least 0.1 inch (2.54 mm) axially from the stator housing. The diameter of rotating metal parts that occupy the space bounded axially by the stator housing and radially by the sensor rotor diameter must be ≤ the sensor rotor diameter. Beyond those limits there are no restrictions on the location or size of rotating metal parts. Figures 2 and 3 illustrate acceptable and unacceptable installations.

A.2.2 Proximity of Stationary Metal Components to Antenna Structure

User installed stationary metal parts must have at least 1 inch (25.4 mm)clearance to the rotating antenna. This restriction applies to installed safety covers and other user parts.

A.3 Stator Installation

Install the stator antenna aligned wtih the rotor. The recommended radial gap is 0.175” (4.44 mm). Under these conditions, acceptable misalignment from shaft runout, axial growth and shaft motion is
±0.4” (10.2 mm) axial (except MCRT® 86008/87008 /88708V is ±0.25” [6.35 mm] and MCRT® 81008 /81708V, MCRT® 86009/87009/88709V and MCRT® 86010/87010/88710V are ±0.2” [5.1 mm]and ±0.3” (7.62 mm)radial maximun (exceptMCRT® 81008/81708V, MCRT® 86009/87009/88709V and MCRT® 86010/87010/88710V which are 0.2” {5.1 mm] maximum). Minimum radial clearance is 0.05”. Orient the stator to provide the most convenient access to the Keyboard/Status LED Panel. Stator orientation has no effect on operation.

If shaft axial motion is unidirectional, then you may offset the stator to use the allowable axial misalignment. Exceeding 1” (25.44 mm)will result in data errors. Because the 0.3” (7.62 mm) radial alignment specification is conservative, at or near room temperature, greater radial misalignment is usually possible. The Power and Data status LEDs allow you to determine the axial limit for your installation.

© 2017 S. Himmelstein and Company—all rights reserved

Installation and Operation Manual, Revision E • • •

All Input lines are TTL Low True Logic, i.e., use a 0 to invoke a function. There are two output lines, Pin C and Pin H. Pin C outputs FM Torque data as a TTL square wave. Pin H outputs the DATA OK signal as High True, i.e. it is High when DATA is OK and Low when it is not. This Open Collector line must be powered by the user with 7 VDC maximum. A 4.7 kΩ pull-up resistor is recommended.

B.2.4 RS232/422/485 Connector Pinout

Notes: Two identical 6 pin connectors are wired in parallel. This arrangement facilitates RS485 connection of multiple Torquemeters to a single host computer. You may use either for RS232 or RS422 service. Data is transmitted in bytes with a start and a stop bit, no parity and no flow control.

TXD and RXD apply to RS232.

± TXD and ±RXD apply to RS422 and RS485 formats. Data is transmitted at 115.2 kBaud. See Figures 6, 7 and 8 for connection diagrams.

Function	Pin
+TXD	A
Ground for RS422/485, Open for RS232	B
Ground	C
-RXD or TXD	D
+RXD or RXD	E
-TXD	F

B.2.4.1 RS232 Connecting Cable Diagram

Figure 6. RS232 Cable Connections

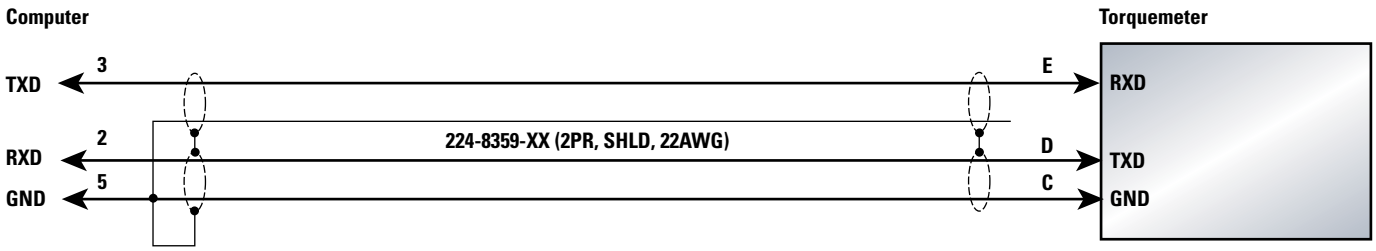

B.2.4.2 RS422 Connecting Cable Diagram

Figure 7. RS422 Cable Connections

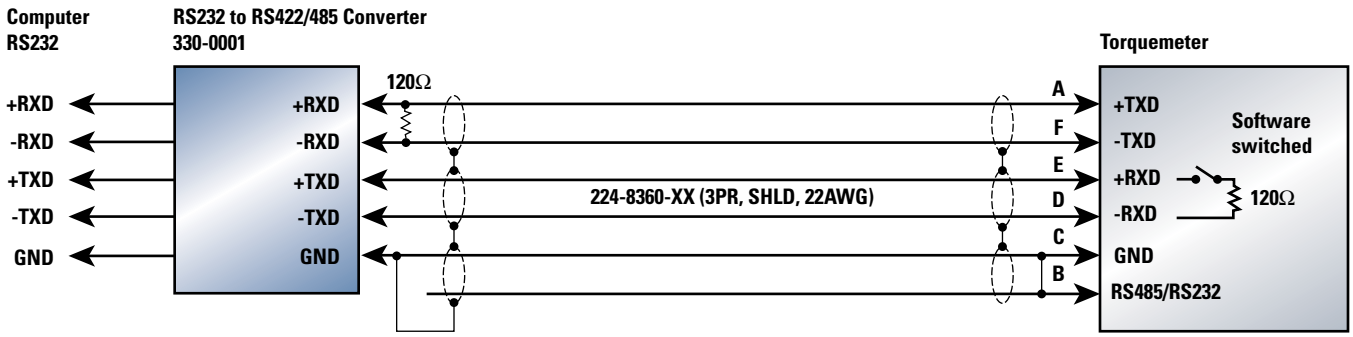

For cable runs greater than 500 feet, terminate RXD data signal at the computer and the Torquemeter with 120Ω. Termination resistors are included on torquemeter and can be switched in and out via BLT-WIN software.

© 2017 S. Himmelstein and Company—all rights reserved

B.2.4.3 RS485 Connecting Cable Diagram for Multiple Torquemeters

Figure 8. RS485 Connection for Multiple Torquemeters and Single Host Computer

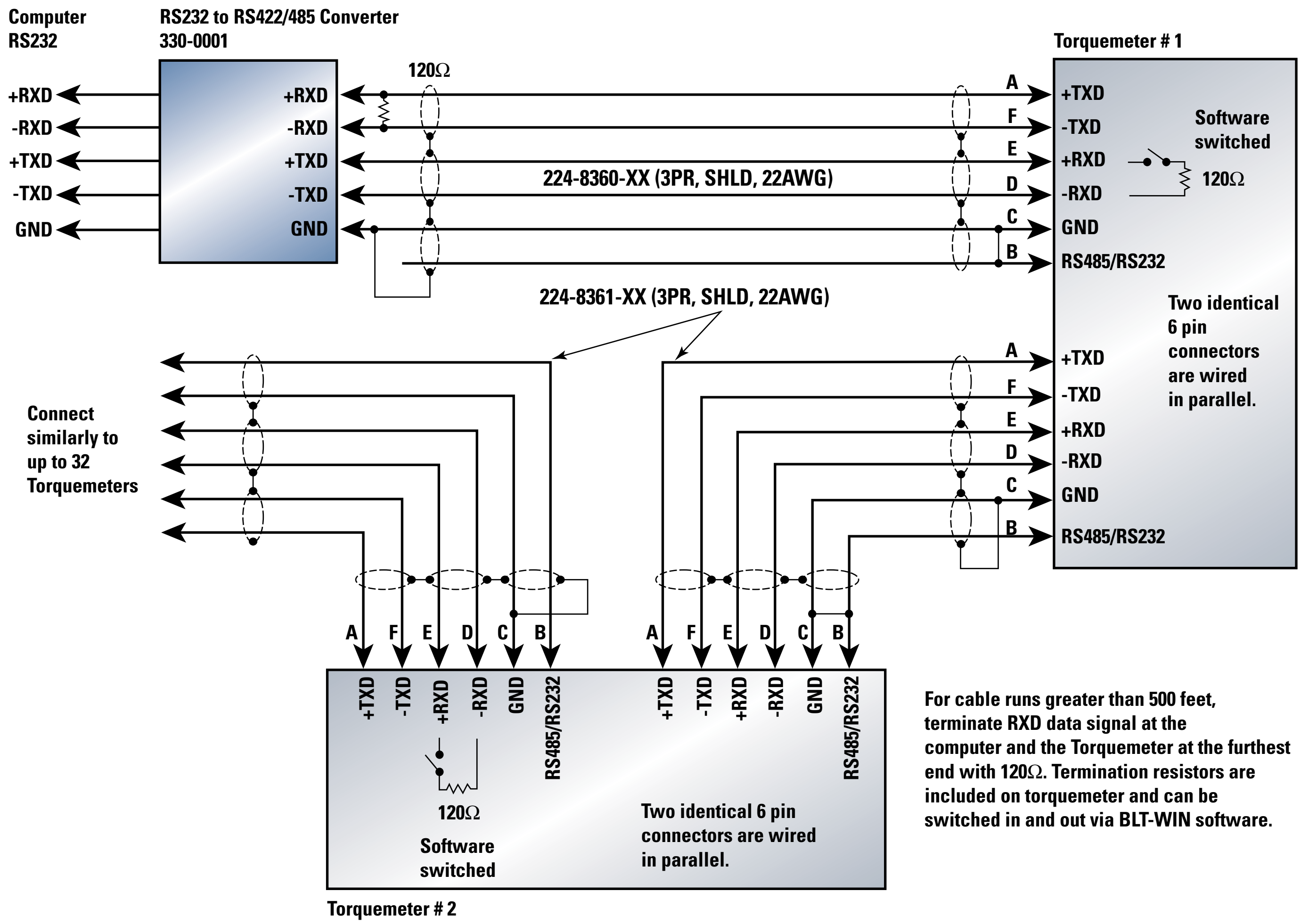

B.2.5 Standard Interconnect Cable Part Numbers

Cable Length (feet) ▸		Part Number		
		20	50	100
Torquemeter Connector	Termination			
Power Input	Tinned leads	224-8362-20	224-8362-50	224-8362-100
Analog Output	Tinned leads	224-8358-20	224-8358-50	224-8358-100
I/O and FM Output	Tinned leads	224-8369-20	224-8369-50	224-8369-100
RS232 Port to PC	9 Pin D	224-8359-20	224-8359-50	Not available
RS422 or 485 to PC Port Adapter	Tinned leads	224-8360-20	224-8360-50	224-8360-100
RS485 Port to 485 Port	320-1271	224-8361-20	224-8361-50	224-8361-100
Analog Output to Model 703 or 723	9 pin D	224-8430-20	224-8430-50	224-8430-100
81708/84700/88700V Dual Range Models Analog Out + Range Select to Model 703/723	Dual 9 pin D's	224-8460-20	224-8460-50	224-8460-100
Speed Output to Model 723/702	9 pin D	224-5327V-20	224-5327V-50	224-5327V-100

B.2.6 RS422/485 and USB Adapters

When the cable run from the Torquemeter to the PC is greater than 50 feet, you should use an adapter to convert the computer port for differential signal transfer using either the RS422 or RS485 Mode.

RS422 is used when connecting to a single Torquemeter. RS485 is used when two or more Torquemeters are connected to a single host computer. For cable runs greater than 500 feet, the internal 120 ohm cable terminations should be connected using the furnished software.

When you connect multiple Torquemeters to a single computer using RS485 communications, you must assign a unique identification (ID) to each Torquemeter. That can be done with the supplied interface software.

We can furnish a PC RS232 port adapter or, a USB adapter for the port conversion. They plug into the PC com port connector. The Torquemeter cable connects to the adapter terminal block. Hence the cable has tinned leads on the computer end.

The **RS232 to RS422/485** adapter is Part Number 330-0001; external power is not required.

The **USB to RS232** adapter is Part Number 330-0002; external power is not required.

The **USB to RS422/485** adapter is Part Number 330-0003; external power is not required.

B.2.7 Earth Ground Connection

*Connect the transducer **stator** directly to **earth ground** – a building's structural steel or a floor rod. If neither is available, drive a six foot copper rod into the floor. Then run **separate ground straps** between it and the test stand components as shown in Figure 9. **Don't "daisy chain" the ground connections.***

If an IGBT-based variable frequency drive (VFD) is used, follow its installation manual. Improperly installed VFD's can cause premature motor and cable failures, and reading errors from excessive noise. VFD's should have shielded power and motor cables. Belden Types 29500 thru 29507 cable are designed for VFD use. See "Cable Alternatives for PWM AC Drive Applications" at www.belden.com. Use the connections shown in Figure 20 of that document. For best results, use a differential input amplifier in these electrically noisy environments.

Figure 9 illustrates correct earth grounding.

C. BLT-WIN PC Interface Software

C.1 BLT-WIN PC Software Overview

Sensors are shipped with standard Windows based PC interface software (Titled: BLT-WIN) provides several valuable functions as follows:

- Change Setup, Unit of Measure, Filter Cutoff Frequency, etc.
- Display Current Measured Torque and Rotor Temperature
- Display Peak Torque
- Display Minimum Torque
- Display Torque Spread
- Set Torque Limits and Flag Limit Violations
- Assign ID Numbers for RS485 Communication
- Connect 120 ohm RS422/485 Cable Termination
- Make Real-time Torque Plots
- Store Data
- Store Test Setup
- Control Test Functions
- Perform Dead Weight Calibration and Archive Cal Data
- Display System Generated Messages

Figure 9. Correct System Earth Grounding

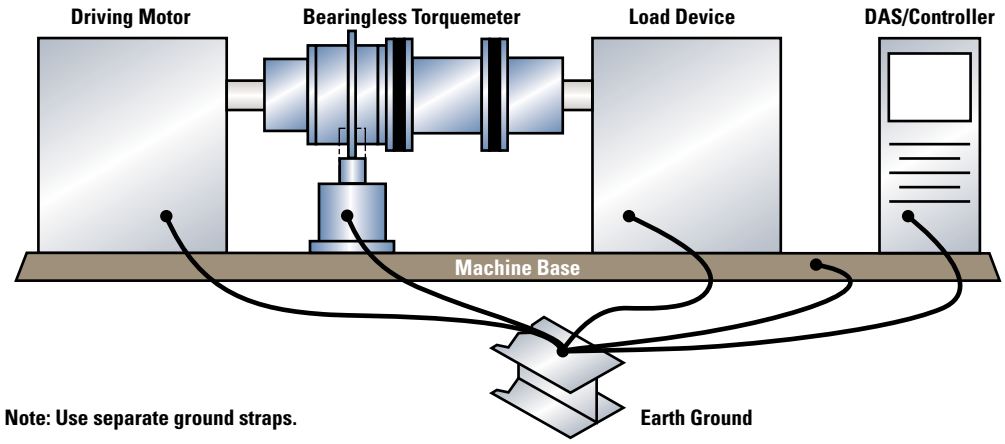

© 2017 S. Himmelstein and Company—all rights reserved

Functions and parameters are chosen with mouse clicks from options shown on the screen and/or entered via the PC keyboard. Page 1 lists the installed setup, when shipped. A user may write his own communication software; see Appendix V for information on the serial command structure.

C.2 Change Sensor/Test Setup

- Select any of 10 units of measure. Default units are: lbf-in.
- Select any of 11 data filter cutoff frequencies; 1 to 1 kHz in 1-2-5 steps plus 3 kHz.
- Select ±5V or ±10V full scale analog output.
- Select FM center frequency, either 10, 20 or 40 kHz.
- Re-scale the torque range to any value ≤ the Torque meter full scale. Re-scaling yields greater resolution and ±5 or ±10V analog output at the lower torque range. However, it will not have the backing of an accredited calibration and it will have reduced temperature performance. The Dual-Range MCRT® 81708V/84700V/88700V Torquemeters avoid those problems. See Appendix III for additional information.
- Set software Torque Limits and assign them to Max/Min data, or Current data, or Spread data. Limit response time is determined by the users visual response (4 per second) and acuity. However, it may be lower if the filter bandwidth is set ≤2 hertz. The limits are non-latching except, when they classify max/min data where they will latch. Use the software or I/O line to reset max/mins and latched limits.
- Toggle MCRT® 81708V/84700V/88700V Range.
- Save data to disk.
- Store test setup on disk.
- Adjust the value of the analog output voltage. The output voltage(s) is factory set at ±5.000V and ±10.000V and should not be re-adjusted without accurate measuring equipment.
- Invoke or disable password protection and enter a new password. Default condition is password protection off: the default password is SHC. You can change the password to any string but, **should record the new one in a secure place.**
- Assign Torquemeter ID for RS485 communication mode.
- Select Temperature units of measure. Default unit is °F.

Setup changes made with the Interface Software don't require recalibration. Any change will automatically re-configure dependent parameters. For example, if units are changed from lbf-in to Nm, torque data and Cal Checks will be correct without further adjustments.

C.3 Display Measured Data

- Current Torque numeric data with unit of measure
- Torque Maximum and Minimum numeric data with unit of measure
- Torque Spread numeric data with unit of measure
- Status of user set High and Low Torque Limits
- Real time plot of Torque
- Rotor Temperature numeric data

C.4 Control Test

You can initiate the following actions from a PC:

- Invoke CW and CCW Rotor Torque Bridge Shunt Cal Checks
- Invoke Tare Torque
- Clear Tare
- Toggle MCRT® 81708V/84700V/88700V Range
- Reset Torque Max/Mins
- Save current setup parameters
- Save Data to disk

C.5 Perform Dead Weight Calibration

Units are shipped with an NIST traceable dead weight calibration performed in our accredited laboratory; a Calibration Certificate is included with the sensor. The results of that calibration are stored in non-volatile memory and automatically loaded on power up. Remote Calibration Checks are referenced to it. They may be initiated from a PC via the Com Port, via TTL I/O control or, from the stator keypad.

The user can perform a dead weight calibration and store it in memory. The interface program prompts you through the process. If done, the original factory calibration will be archived as will subsequent dead weight calibrations.

However, unless you have accurate, *accredited calibration facilities, you should not substitute a field calibration for the factory calibration.* Rather, you can perform a field calibration for use as a rough check of operation. If an erroneous calibration is inadvertently stored, the factory calibration(s) may be recovered.

C.6 Calibration Intervals

For continuous or intermittent service, make periodic Calibration Checks using the internal, NIST referenced shunt calibration feature.

In applications requiring high accuracy, perform *a dead weight calibration in an* ***Accredited Torque Calibration Laboratory*** *at intervals specified by your QC Procedures.* If you do not have an established QC procedure, then we recommend an initial one year interval.

If the MCRT® Torquemeter is Overloaded or operates abnormally, then calibrate/inspect it at once.

© 2017 S. Himmelstein and Company—all rights reserved

Himmelstein offers certified dead weight calibration service, traceable to NIST, for all its products. Its calibration laboratory is accredited (Laboratory Code 200487-0) by NVLAP, an arm of the NIST. For further information visit our website at www.himmelstein.com, or follow the accreditation link at www.nist.gov.

D. Stator Keypad and Status Indicators

D.1 Keypad

The following functions can be performed with keypad switches:

- Perform a CW rotor side shunt calibration.
- Perform a CCW rotor side shunt calibration.
- Tare Torque – accomplished by pressing and holding both switches for at least 5 seconds.

Calibration should be done while the driveline torque is zero. If locked-in torque is present, break a coupling to remove it.

D.2 Status Indicators

The keypad incorporates three status LED's.

POWER LED	—	**Yellow** during power-up **Green** when power is OK **Red** when power has fault
DATA LED	—	**Green** when data is OK **Red** if data fault

When the MCRT® 81708V/84700V/88700V is in its Low Range, the GREEN DATA LED blinks slowly.

TEMPERATURE	—	**Green** in operating range **Red** out of operating range

Should the user inadvertently install a mismatched stator assembly, the system will:

- Flash the RED DATA LED
- Turn off the POWER LED and the TEMPERATURE LED
- The furnished software will publish a text warning on the connected PC
- Clamp torque outputs (analog, fm and digital) to the equivalent of Zero Torque

E. Operating & Safety Considerations

E.1 Applicability

This discussion is applicable to all models including MCRT® 81008V, 84000V, 85000V, 86000V, 87000V, 81708V, 84700V and 88700V Series devices.

E.2 Allowable Torque Loads

Operate an MCRT® Torquemeter within its full scale; see booklet cover for rating of this device.

E.2.1 Overload Considerations

The Overload ratings of an MCRT® 81008V/84000V/86000V and the High Range of the 81708V/84700V/88700V are 2 times their full scale rating. The Overload rating of an MCRT® 85000V/87000V is four times its full scale rating. The Overload rating of the MCRT® 81708V/84700V/88700V's Low Range is ten times its range. This Torquemeter's Overload is listed on the cover sheet. The Torquemeter will not yield (evidenced by a non-return to zero) or fail or suffer a permanent change in performance if subjected to an instantaneous peak torque up to its Overload value.

Both the full scale and Overload ratings are based on the peak stress seen by the transducer. They are independent of stress duration except, for cyclical (or fatigue) loading considerations; see ¶E.2.2. Virtually all rotary power producing and absorbing devices produce pulsating rather than smooth torque and power.

Thus, in addition to its average torque and speed values, the driveline torque usually includes a fundamental (driving) frequency and superimposed harmonics. Torsional vibration magnitudes can be amplified by the driveline. See Appendix IV and Bulletin 705 for further information. The Figure 10 waveform is typical of what can occur in the real world.

Therefore, a conservative design approach dictates the ***Torquemeters' Overload => twice the probable peak torque. Reserve the region between the peak instantaneous torque and the Torquemeter's Overload rating as a safety margin for unexpected loads.*** *Do not knowingly operate in the Overload region.* ***If expected torques exceed the Overload, use a Torquemeter with a higher Overload rating.***

Figure 10. Reciprocating Machine Torque Profile

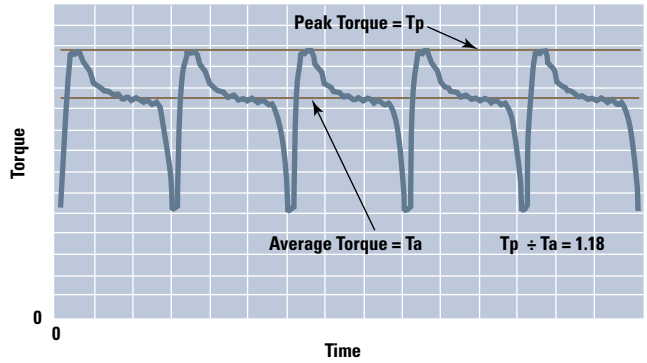

E.2.2 Fatigue Considerations

If the peak torque seen by an MCRT® Torquemeter is less than half its ***Overload*** rating, it can handle full torque reversals with infinite fatigue life. When peak torques are cyclical, and exceed 50% of the Overload rating, then fatigue failure can occur.

© 2017 S. Himmelstein and Company—all rights reserved

In those circumstances you should use a Torquemeter with a higher Overload rating.

E.2.3 Starting High Inertias with Electric Motors

When started across the line, during the start, a motor's developed torque can be several times its rated torque. Thus, a Digital Torquemeter sized to handle the motor's rated load torque, can be overloaded during starting. Drivelines are particularly vulnerable when oversized motors drive light duty, high inertia loads.

To avoid damage when starting high inertia loads, use a Torquemeter with an Overload rating > the motor's starting torque, or limit the starting torque to a safe value. Techniques to limit electric motor starting torques include:

- **Use reduced voltage starting.**
- **Electronically limit the maximum motor current.**
- **Add as much inertia to the motor output as it can safely start.**
- **Use "shock absorbing" couplings. Careful coupling selection and thorough analysis is essential. Under some conditions, such couplings can aggravate rather than improve the situation.**

E.3 Allowable Extraneous Loads

Any moment or force a Torquemeter sees, other than the transmitted torque, is an extraneous load. Depending on the installation, these could include bending moments, axial thrust and shear force. Crosstalk errors from such loads are typically 1% of the applied bending or, 1% of the applied thrust when all units are consistent. The Specification (Appendix III) contains extraneous load limit values. ***You must stay within those limits to avoid Torquemeter damage.***

E.4 Overrange Considerations

A Torquemeters Overrange Rating is the highest torque at which its output tracks its input. A *High Level Output Torquemeter must have a high Overrange Rating to be error-free over its entire operating range. If it doesn't, then peak and average torque readings can have significant errors. Himmelstein Bearingless Torquemeters have industries' highest Overrange Ratings; 150 to 300%, model dependent; see Specification (Appendix III).* Appendix I is a discussion of this critically important parameter.

E.5 System Warm-up

After installation or before driveline reconfiguration, allow at least 45 minutes for the system to adapt to the installed metal environment. Otherwise, allow a 5 minute warmup for 0.1% data or 35 minutes to obtain the maximum measurement accuracy

F. Zero Velocity Speed Pickup Options

F.1 Applicability

This section is applicable to both the Code O Optical and the Code Z Magnetic Speed Pickups.

F.2 Optical (Code O) Zero Velocity Speed Pickup

Code O Optical Pickups can be mounted on either side of the stator housing; See Figure 11A. If more convenient, you may move it from the factory-installed position to the alternate position by removing two retaining screws and re-installing it. When used, Optical Pickups do not affect the Torquemeter's allowable rotor/stator axial and radial misalignment, which makes them the preferred choice. Code O pickups are designed to operate in any light environment, including bright sun-light. A commercial lens/eyeglass cleaner may be used to clear the lens should it and/or the reflective target pattern become contaminated.

F.3 Magnetic (Code Z) Zero Velocity Speed Pickup

When used, Code Z Magnetic Pickups restrict allowable rotor/stator misalignment to ±0.04 inches axially and ±0.02 inches radially. They are used in very dirty environments where a Code O pickup requires frequent cleaning. *Rotor/Stator alignment should center the pickup on the flanges' machined slots,* see Figure 11B and related notes for alignment instructions.

F.4 Speed Pickup Pinout, Power Input and Output Signal

Both types use the same 3 pin connector which has the tabulated pinout. A mating Connector is furnished. Replacement mating connectors may be ordered using P/N 224-5361.

Pinout	Optical Type—Option Code O	Magnetic Type—Option Code Z	Optical Encoder – Code OE
Pin A	+ Power, 10 to 26 VDC	+ Power, 6 to 15 VDC	Channel "A"
Pin B	Output, TTL Pulse Train	Output, Pulse Train ≈ Supply Voltage	Channel "B"
Pin C	Common	Common	Common
Pin D	N.A.	N.A.	Common
Pin E	N.A.	N.A.	+Power, 5Vdc

© 2017 S. Himmelstein and Company—all rights reserved

Figure 11A. Typical Code O Pickup Installation

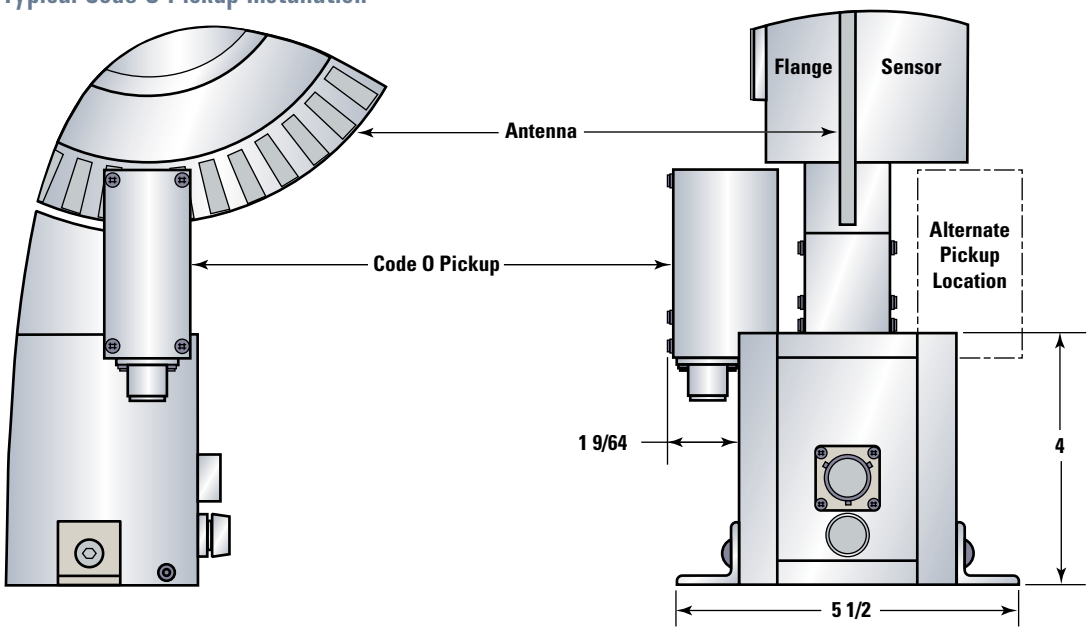

Figure 11B. Typical Code Z Pickup Installation

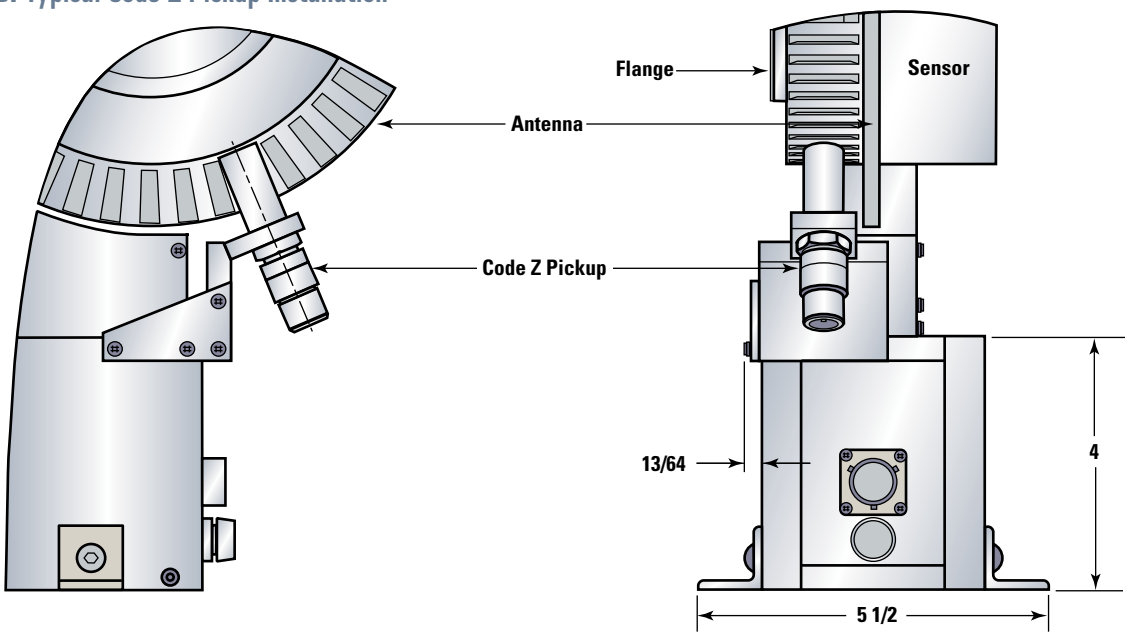

Notes: To adjust the pickup's radial location, proceed as follows:

1. ***With shaft motion stopped,*** loosen the jam nut.
2. Turn the pickup in (clockwise) until it makes contact with the rotor.
3. Back off the pickup (counterclockwise) 260 degrees (about 0.7 turns).
4. Tighten the jam nut.
5. Slowly rotate the shaft to verify there is no contact or rub. If contact exists, re-adjust the pickup until it is eliminated.

If you mount the Torquemeter with the sensor "flipped" - with the flange oriented to the right of the sensor rather than to its' left, as illustrated, the Code Z pickup must be reinstalled to lineup with the rotor flange slots. That is accomplished as follows:

1. Remove the two screws holding the bracket assembly to the stator housing.
2. Remove the two screws attaching the slotted plate to the vertical support.
3. Re-attach the slotted plate to the other end of the vertical support.
4. Re-attach the bracket assembly to the housing so the pickup lines up with the flange slots.
5. Adjust the pickup radial position per above instructions.

© 2017 S. Himmelstein and Company—all rights reserved

Figure 11C. Typical Code OE Pickup Installation

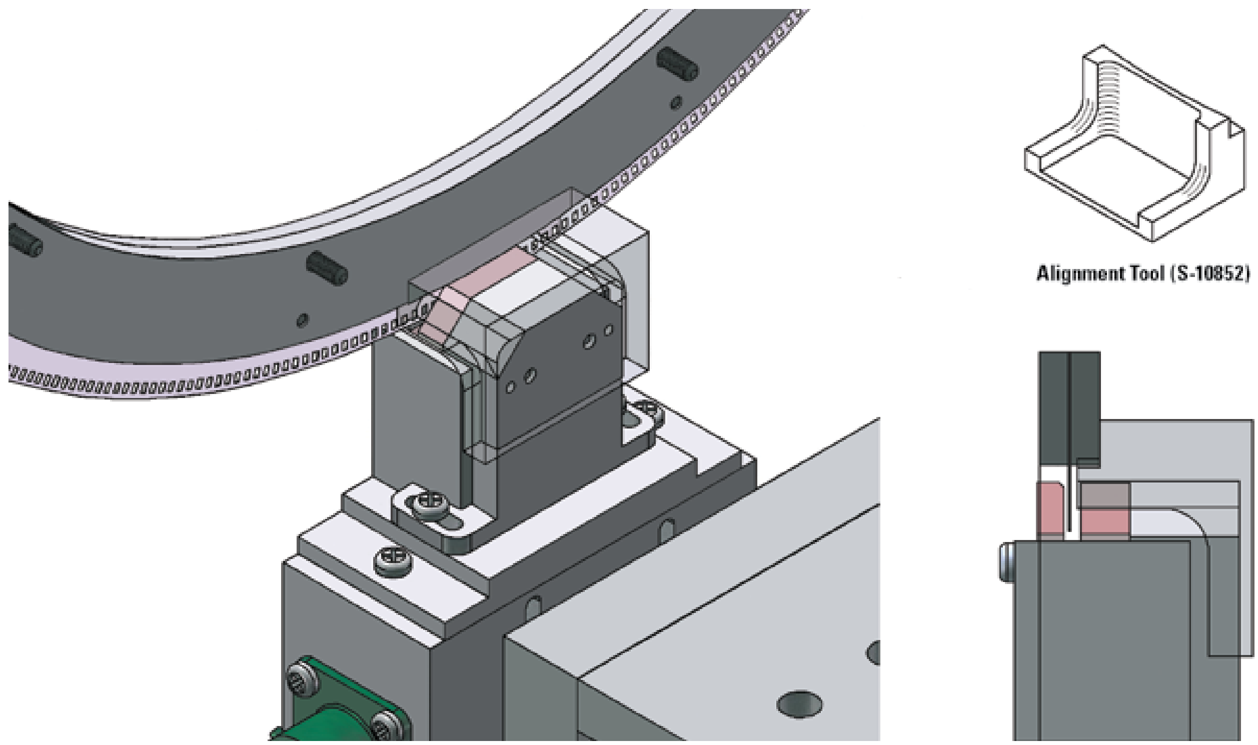

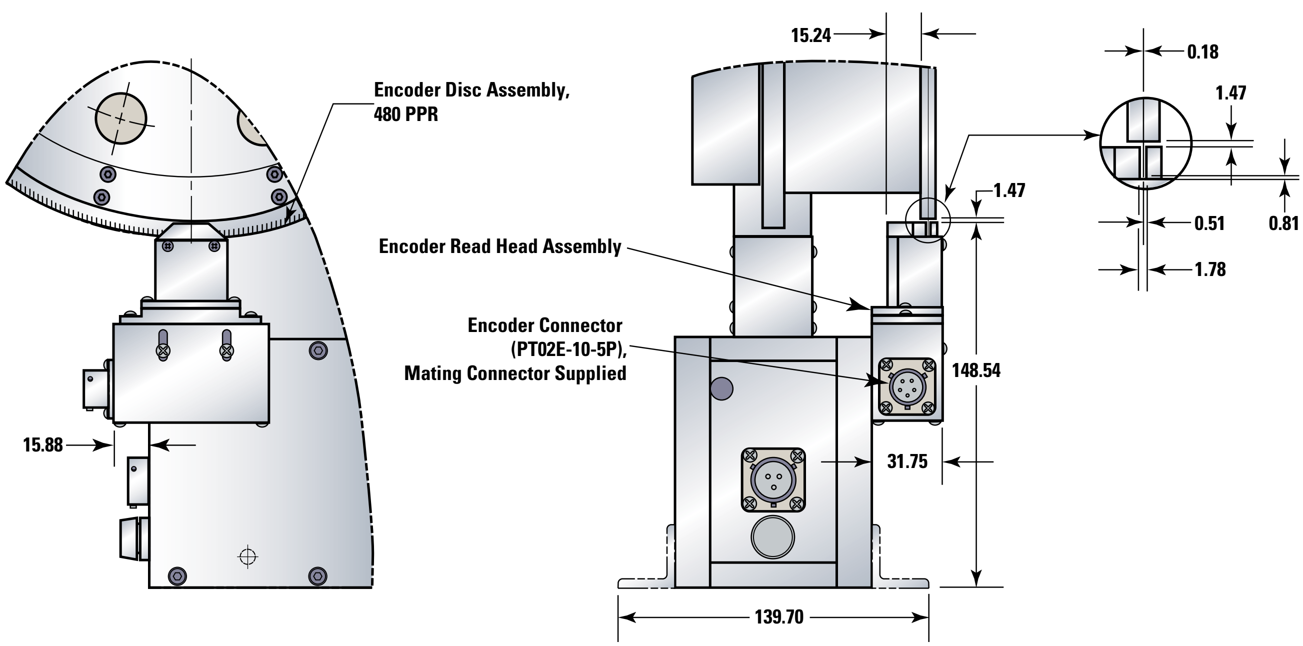

Encoder Installation Notes:

1. Encoder disc assembly is shipped unattached to the sensor. Install the encoder disc assembly to the torque sensor rotor using twelve (12) 4-40 x ½ flat head, self-locking, socket cap screws. Screws should be torqued to 6.9 Nm.
2. Install torque sensor rotor assembly into the drivetrain using 24 M20 bolts torqued to 650 Nm.
3. Align and install the stator assembly to supporting fixture.
4. Loosely attach encoder read-head assembly to the stator housing.
5. Place alignment tool over top of the read-head.
6. Position and then tighten read-head assembly in place.
7. Remove alignment tool.

© 2017 S. Himmelstein and Company—all rights reserved

Installation and Operation Manual, Revision E • • •

"constant load", real world driveline torque is never constant. Instead, it consists of an average torque with one or more superimposed torsional components.

Torquemeter Range Selected for "Best Accuracy"

Tables 1 and 2 show the response of two Torquemeters each with 0.1% Combined Error. Both Torquemeters have a full-scale rating equal to the engines rated (average) torque; the generally accepted condition for assuring best accuracy. Table 1 Torquemeter has 150% Overrange, Table 2 Torquemeter has no Overrange. Both monitor the same driveline which has a torsional resonance at 45 Hertz (2700 rpm) with peak amplitude equal to half the Average Torque.

The Torquemeter with 150% Overrange measures Peak and Average Torques without error. The Torquemeter without Overrange has a 16% error for Average Torque and a 33.3% error for Peak Torque. That device incorrectly reports the engine power and related driveline stresses to be much lower than actual. *Substantial, unacceptable real-world errors occur despite a Torquemeter Combined Error specification of 0.1% and, with the range selected for best accuracy.*

The magnitude of such errors are a function of system

Table 1

Average Torque = Full Scale		Overrange—Percent of Full Scale					
Dynamic Torque Peak (% of Full Scale)	Torque Errors (% of Reading)	100	110	120	130	140	150
10	Peak Torque Error ➧	9.09	0	0	0	0	0
	Average Torque Error ➧	3.19	0	0	0	0	0
20	Peak Torque Error ➧	16.7	8.33	0	0	0	0
	Average Torque Error ➧	6.38	2.18	0	0	0	0
30	Peak Torque Error ➧	23.1	15.4	7.69	0	0	0
	Average Torque Error ➧	9.58	5.1	1.77	0	0	0
40	Peak Torque Error ➧	28.6	21.4	14.3	7.14	0	0
	Average Torque Error ➧	12.8	8.16	4.37	1.52	0	0
50	Peak Torque Error ➧	33.3	26.7	20	13.3	6.67	0
	Average Torque Error ➧	16	11.9	7.22	3.88	1.36	0

Table 2

No Overrange		Average Shaft Torque—Percent of Full Scale					
Dynamic Torque Peak (% of Full Scale)	Torque Errors (% of Reading)	50	60	70	80	90	100
10	Peak Torque Error ➧	0	0	0	0	0	9.09
	Average Torque Error ➧	0	0	0	0	0	3.19
20	Peak Torque Error ➧	0	0	0	0	9.09	16.7
	Average Torque Error ➧	0	0	0	0	2.43	6.38
30	Peak Torque Error ➧	0	0	0	9.09	16.7	23.1
	Average Torque Error ➧	0	0	0	2.21	5.67	9.58
40	Peak Torque Error ➧	0	0	9.09	16.7	23.1	28.6
	Average Torque Error ➧	0	0	2.17	5.46	9.07	12.8
50	Peak Torque Error ➧	0	9.09	16.7	23.1	28.6	33.3
	Average Torque Error ➧	0	2.26	5.55	9.03	12.5	16

© 2017 S. Himmelstein and Company—all rights reserved

Overrange, the amplitude of dynamic torque perturbations and the average torque level. Table 1 illustrates the effect of Overrange and Dynamic Torque Peak when the Average Torque is at full scale; the generally accepted condition for best accuracy. Note, the no Overrange device has an unacceptable error even with a Dynamic Torque Peak as low as 10% of full scale.

Torque Measurement Systems Without Overrange

Many commercial Torquemeters, Signal Conditioners and most Computer Data Acquisition Cards have no or little Overrange. Table 2 shows their Overrange errors. *As noted, such devices operating at full scale have large errors* ***even with small Dynamic Torques.*** Unless operated downscale, a no Overrange device has much larger errors when higher Dynamic Peak Torques are present. To avoid such errors, you can greatly oversize the Torquemeter. Oversizing increases temperature, linearity, and hysteresis errors, and has other detrimental effects. ***Adequate Overrange is the solution, Torquemeter oversizing is not.***

Avoiding Fatigue Failures

A Torquemeter's **Overload Rating** is the maximum torque that can be applied without yielding its element or otherwise producing a permanent change in its performance. Overload is usually specified as a percentage of full scale. Cataloged Himmelstein Torquemeters have Overload Ratings between 200% and 1,000% of full scale.

Repeated torque cycles can cause a *fatigue failure when torque peaks are less than a Torquemeter's Overload Rating.* Cataloged Himmelstein Torquemeters have an infinite fatigue life when subjected to *full torque reversals equal to half their Overload Rating;* see Table 3. Thus, when cyclical torques are expected in the Overload region, select[3] a Torquemeter with a 400% (or higher) Overload Rating. There is a Himmelstein Torquemeter for virtually any level of torsional oscillations.

Conclusion

In summary, unless a Torquemeter's Overrange is specified and is adequate for the driveline Dynamic Torques, significant real world errors can occur no matter how impressive its other specifications are. These errors are virtually certain when you use a Torquemeter, Signal Conditioner or Data Acquisition Card with no or little Overrange.

S. Himmelstein and Company is the only manufacturer that publishes Overrange specifications. Overrange of all our premium Digital Torquemeters is between 150% and 300% of full scale. Most DC Operated Analog Torquemeters have 133% of full scale Overrange. Our Series 700 Instruments have at least 150% of full scale Overrange on their digital output. Their analog outputs have 164% of full scale Overrange on the 5V setting and 135% of full scale Overrange on the 10V setting. Himmelstein Torquemeters and Signal Conditioners provide accurate shaft torque and power measurements at high Average Torque levels with high Dynamic Torque Peaks present.

Table 3. Fatigue Characteristic of Cataloged Himmelstein Torquemeters

Torquemeter Overload Rating	Cyclical Torque Peak for Infinite Fatigue Life
200% of Full Scale	≤ 100% of Full Scale
400% of Full Scale	≤ 200% of Full Scale
1,000% of Full Scale	≤ 500% of Full Scale

References:

2. Technical Memorandum 8150, *Avoiding the Destructive Effects of Torsional Resonance,* S. Himmelstein and Company– see Appendix IV.

3. Bulletin 705, *Choosing the Right Torque Sensor,* S. Himmelstein and Company.

© 2017 S. Himmelstein and Company—all rights reserved

APPENDIX II

BEARINGLESS DIGITAL TORQUEMETER SPECIFICATION

Refer To The following Bulletins for Complete Specifiications and Dimensions.

Torquemeter Model	Bulletin Number
MCRT® 81008V	8002
MCRT® 81708V	8003
MCRT® 84002V	8701
MCRT® 84004V	8701
MCRT® 84007V	8701
MCRT® 85002V	8701
MCRT® 85004V	8701
MCRT® 85007V	8701
MCRT® 86008V	8703
MCRT® 86009V	8703
MCRT® 86010V	8703
MCRT® 87008V	8703
MCRT® 87009V	8703
MCRT® 87010V	8703
MCRT® 84702V	8707
MCRT® 84704V	8707
MCRT® 84707V	8707
MCRT® 88708V	8801
MCRT® 88709V	8801
MCRT® 88710V	8801

© 2017 S. Himmelstein and Company—all rights reserved

APPENDIX III

TORQUEMETERS WITH EXTENDED MEASUREMENT RANGE

Extending a Torquemeters measurement range[1] can yield two valuable benefits. That is, an extended range Torquemeter:

1. Reduces the number of Torquemeters needed to test a wide torque range.
2. Can measure both high torsional peaks and low running torque without risking torquemeter failure. Torquemeters must have simultaneous outputs on each range to provide this capability.

The advent of High Resolution Digital Torquemeters has tempted some suppliers to mistakenly claim those benefits. Installing an on-board, high resolution analog-to-digital converter (ADC) is equivalent to placing one downstream of a conventional analog output sensor. Both will provide high resolution and "extended" range, but only with significantly degraded accuracy. That's why all Torquemeter manufacturers offer many ranges to handle different capacities rather than a few models with extended range capability.

The table below compares performance of one such High Resolution Digital Torquemeter to a Himmelstein, MCRT® 79007V(1-5), Dual Range Torquemeter. Himmelstein Dual Range units are calibrated[2], temperature-compensated and specified on each range and both outputs are simultaneously available. The non- Himmelstein unit has an advertised resolution of 0.001% of full scale; it has only one signal output. Both devices have a full scale range of 100,000 lbf-in. The High Resolution Digital Torquemeter is re-scaled to 20,000 lbf-in to match the MCRT's
Low Range. Error calculations include the only published error specifications for the High Resolution device; Non-linearity, Zero and Span Temperature Effects.

At full scale, under real-world conditions, the MCRT® 79007V has less than half the error of the High Resolution unit. At 20% of full scale (20,000 lbf-in), its advantage is 5.6 times. At 4% of full scale (4,000 lbf-in) the advantage is greater than 7 times. At lower ranges much of the increased error is due to the impact of temperature effects. Nonetheless, *with a virtually insignificant 5°F rise, when the High Resolution device range is extended to 20,000 lbf-in, its error is 62.7 lbf-in or 2.7 times that of the MCRT® Dual Range unit.*

	Torque Errors @ 100,000 lbf-in		Torque Errors @ 20,000 lbf-in	
Error Source	**High Resolution Torquemeter**	**MCRT® 79007V(1-5) High Range**	**High Resolution Torquemeter**	**MCRT® 79007V(1-5) Low range**
Non-Linearity[3]	50 lbf-in	70 lbf-in	50 lbf-in	20 lbf-in
Zero Drift[4] for 70 °F Rise	210 lbf-in	70 lbf-in	210 lbf-in	35 lbf-in
Span Drift[5] for 70 °F Rise	210 lbf-in	70 lbf-in	210 lbf-in	35 lbf-in
Total Error—Worst Case[6]	470 lbf-in	210 lbf-in	470 lbf-in	90 lbf-in
Total Error—Statistical[7]	348 lbf-in	139 lbf-in	348 lbf-in	61.6 lbf-in

1. Measurement range may only be lowered; an increase is limited by the device's overload capacity and related danger of element failure.
2. Himmelstein Torquemeters and Systems are calibrated in our NVLAP ACCREDITED LABORATORY, Lab Code 200487-0, and are NIST traceable. NVLAP approved CALIBRATION CERTIFICATES are provided. For details visit www.himmelstein.com, or the "laboratory accreditation" link at www.nist.gov
3. Published non-linearity errors are ±0.05% for the High Resolution Torquemeter, ±0.07% for the MCRT 79007V High Range and ±0.1% for its Low Range.
4. Published Zero Drift (% of Full Scale/°F) for the High Resolution Torquemeter is ±0.003; the MCRT 79007V High Range is ±0.001 and its Low Range is ±0.0025.
5. Published Span Drift for the High Resolution Torquemeter is ±0.003% of Full Scale/°F; the MCRT 79007V is ±0.001 and ±0.0025 % of Reading for each Range.
6. Worst Case Error is the sum of the component errors.
7. Statistical Error is the expanded uncertainty using a coverage factor, k = 2, at a 95% confidence level.

© 2017 S. Himmelstein and Company—all rights reserved

A Torquemeter's test temperature is the sum of the ambient temperature and the rise generated during testing. Rotary power transmission, absorbing and producing devices are never 100% efficient. Their losses invariably generate heat and cause a temperature rise during testing. After test shut down, component temperatures usually rise further, during a soak period, before they return to room temperature. At the test start, Zero Errors due to ambient temperature can be electrically canceled. Uncompensated test-generated temperature rises and ambient temperature changes occurring during the test cannot be canceled and will produce errors. Uncompensated temperature Span Errors can't be removed regardless of their source.

The High Resolution device employs a single shunt calibration circuit. It develops a cal signal, at the signal chain input, at 75% of full scale. That cal signal must be proportionately reduced when the range is re-scaled. Since there is only one shunt cal circuit, the reduction is handled by the processor after amplification and digitizing. As a result, the calibration input to the signal chain remains at 75% of full scale and can be much higher than the torque signal when the range is re-scaled. To the extent it is larger than the highest torque bridge output, it doesn't provide a realistic signal chain test. All MCRT® 79007V Dual Range torquemeters have calibration signals for each range.

Re-scaling requires operation at proportionately reduced bridge signal levels. Since system noise remains unchanged, the measurement signal-to-noise ratio (SNR) is reduced. Externally generated noise exacerbates this problem. Reduced SNR can be a limiting factor when driveline or machine dynamics are at issue.

In summary, to achieve accurate, certifiable measurements, Torquemeters must be calibrated in a facility accredited by an internationally recognized agency such as NVLAP or A2LA. When a Torquemeter is correctly calibrated, digital field re-scaling does not transfer the accredited calibration to the re-scaled range(s). An accredited calibration must be done on every range used for accurate, traceable, certifiable measurements. Even when such rigorous multi-range calibrations are done, re-scaled torquemeters can suffer significant errors from temperature effects and other factors. Himmelstein Series 79000V Dual Range Torquemeters mitigate many of those errors and provide significantly higher accuracy in extended range applications. Multi-range digital versions of these Torquemeters with bearings and in bearingless configurations will be available from Himmelstein in the future.

© 2017 S. Himmelstein and Company—all rights reserved

APPENDIX IV

AVOIDING THE DESTRUCTIVE EFFECTS OF TORSIONAL RESONANCE

Summary

The rapidly expanding use of diesel engines and a-c variable speed drive systems has made it essential for test stand users and designers to acquire a working knowledge of torsional effects. Both drive types carry a much higher risk of associated component failures than either spark ignition engines or other variable speed motor types. The diesel's high amplitude torsional output is well-known. The problems associated with a-c drives stem from the very wide range of output torque forcing frequency. Unless such drivelines are analyzed and modified where necessary, there is a high probability resonance will fall within the operating speed range and cause component failure. Technical Memorandum 8150 shows how to estimate torsional resonant frequencies and describes how to avoid destructive effects. Both practical and theoretical aspects are included. Several typical problems are analyzed and solutions presented.

Background Discussion

All mechanical power-producing devices – hydraulic motors, air motors, electric motors, internal combustion engines – have discrete poles. As a result, their output torque is not developed smoothly but has periodic torque pulsations or torsional vibrations. These torque variations in turn, produce periodic velocity variations or accelerations.

Thus, in addition to having an average torque and speed value, the input (forcing function) to a shaft network has a fundametal frequency and multiples or harmonics of that frequency. This dynamic forcing function is applied to power transmitting and consuming devices which invariably include complex mechanical networks. When the fundamental forcing frequency, or one of its harmonics, is equal to the torsional resonant frequency of the network, a significant torque magnification can occur. That is, the applied peak-to-peak torque variations can be increased by a significant factor.

Avoiding Problems

The preferred method of avoiding the destructive effects of torsional resonance is to place a flywheel (with a large moment of inertia) between the source of torque pulsations and the remainder of the network and/or to use torsionally soft elements (couplings, shafts, etc.) in the driveline. Both tactics lower the system resonant frequency (**Fr**). That reduction allows operation well above resonance and thus attenuates rather than amplifies the torsional effects. Stated in other words, the modified shaft network is a low pass filter that prevents the torsionals from propagating to the rest of the system.

If other considerations prohibit the use of a flywheel, it is often possible to operate well below resonance. Under these conditions, the resonant frequency should be at least 2.5 times the highest forcing frequency. When operating well below resonance, the fundamental torsional pulsations will be seen by the shaft network without either significant magnification or reduction. Therefore, all component stresses must be low enough to survive the peak torques and be fatigue-rated for the peak-to-peak torque reversals. Damping will reduce the magnification factor at resonance and can be added by using fluid couplings. However, they introduce power loss which is not acceptable in most applications.

Since all driveline components must handle the peak torque **– the sum of the average driveline torque and the peak torque variation –** one or more of those components can fail even though it is conservatively rated to handle the average torque. A fatigue failure is most likely to occur when high frequency torsional vibrations are present. However, if the resultant peak torque is high enough, even a yield failure is possible.

Figure 1 illustrates the torque multiplication effect of torsional resonance. When the forcing function frequency (**Ff**) is equal to the torsional resonant frequency (**Fr**), the multiplication is a maximum. It can approach infinity with no damping present. In severe service, such as diesel drivelines, it is not unusual to find resonant torque (and therefore stress) magnifications of two to seven times. From the figure, one can see the torsional variations are **reduced in amplitude**, rather than increased, when the torsional resonant frequency is well below the forcing frequency.

© 2017 S. Himmelstein and Company—all rights reserved

Figure 1. Magnification Factor vs. FF/FR

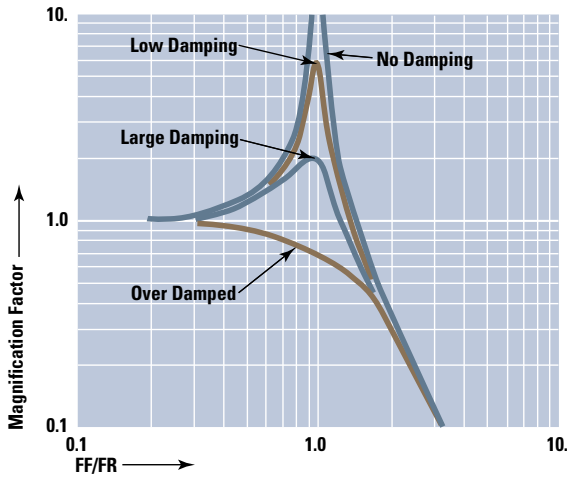

Useful Formulae

In diesel drivelines, it is especially important that the torsional resonant frequency be well below the operating speed range. A mechanical schematic of a diesel engine dynamometer is shown in **Figure 2**. In such a dynamometer the test engine drives the absorber through a torquemeter and flexible couplings. It may be classified as a two mass, single spring system and is typical of motor-generator sets and similar machinery installations. The inertia of the load (**J2**) and the test engine flywheel and crankshaft (**J1**) are usually large compared to the inertia of the torquemeter and the shaft couplings. Thus, the system resonant frequency may be computed by using Equation 1 where,

J1 is the moment of inertia of the engine in **LB-IN SEC²**
J2 is the moment of inertia of the absorber in **LB-IN SEC²**
K is the torsional stiffness of the torquemeter in **LB-IN/RADIAN**

$$F_R = \left(\frac{30}{\pi}\right)\left(\frac{K(J1+J2)}{(J1)(J2)}\right)^{1/2} \text{ CPM} \quad \text{.....(1)}$$

$$\text{Maximum* Magnification} = \left(\frac{1}{1-\left(\frac{F_F}{R_R}\right)^2}\right) \quad \text{.....(2)}$$

* = Assumes No Damping

$$J1 = \frac{J2}{\left(\frac{J2}{K}\right)\left(\frac{\pi F_R}{30}\right)^2 - 1} \text{ LB - IN SEC}^2 \quad \text{.....(3)}$$

$$K = \left(\frac{\pi F_R}{30}\right)^2\left(\frac{(J1)(J2)}{(J1+J2)}\right) \text{ LB - IN/RADIAN} \quad \text{.....(4)}$$

For a Solid Steel Cylinder with
Diameter = D INCHES
Length = L INCHES

$$J = \frac{LD^4}{13908} \text{ LB - IN SEC2} \quad \text{.....(5)}$$

For a Solid Steel Torsion "Spring" with
Diameter = D INCHES
Length = L INCHES

$$K = \frac{1.178 \times 10^6 D^4}{L} \text{ LB - IN/RADIAN} \quad \text{.....(6)}$$

Shaft sections connected in series will have an equivalent spring constant of K_E

$$K_E = \frac{1}{\frac{1}{K_1} + \frac{1}{K_2} + \frac{1}{K_3} \cdots\cdots + \frac{1}{K_N}} \quad \text{.....(7)}$$

where K_1, K_2, K_3, ... K_N are spring constants of individual shafts

© 2017 S. Himmelstein and Company—all rights reserved

Figure 2

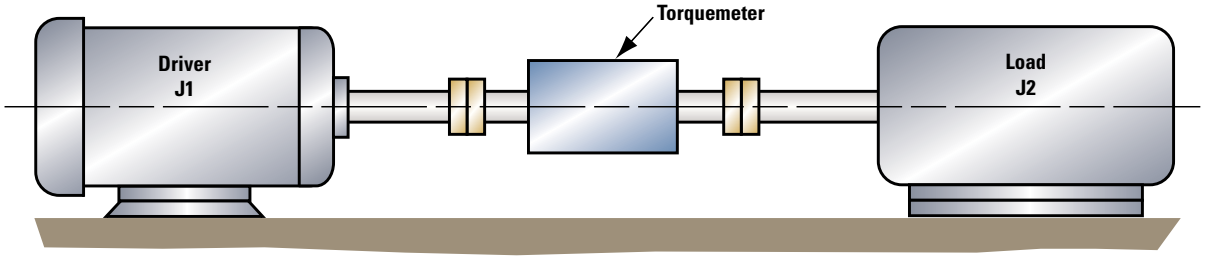

Practical Examples

General

Torsional resonance is of great practical importance in the examples analyzed. The first two cover diesel engines which produce high amplitude torque variations. A motor with variable frequency drive system is discussed in Case 3. Analysis of variable frequency drives is necessary because their speed ranges are typically 5 to 15 times greater than diesel engines and, because the probability that destructive resonance will occur increases with the speed range.

Case 1, A Safe Diesel Installation

A 2,000 HP at 1,050 RPM, 12 cylinder, 4 cycle diesel engine is to be tested on an engine dynamometer over the speed range from 400 to 1,200 RPM. An MCRT® 28008T(2-5) 200,000 LB-IN torquemeter measures torque and speed. The absorber is a generator/load combination. The following data summarizes the installation characteristics:

J1 (engine crankshaft and flywheel) = 2,400 LB-IN SEC^2
J2 (absorber inertia) = 4,530 LB-IN SEC^2
K = 29,000,000 LB-IN/RADIAN (see Bulletin 761)
Ff, minimum = 400 RPM X 12*/2 = 2,400 CPM
Ff, maximum = 1,200 RPM X 12*/2 = 7,200 CPM

**Forcing frequency out of a 4 cycle IC engine is one-half the product of the shaft speed and the number of cylinders.*

Equations 1 and 2 can be used to calculate the shaft network resonant frequency and maximum possible (no damping) magnification factors. The results are summarized below:

Fr = 1,298 CPM (equal forcing frequency occurs at 216 RPM)
Maximum Possible Magnification at 400 RPM = 0.41
Maximum Possible Magnification at 1,200 RPM = 0.03

There is virtually no risk of damage from torsional resonance because the resonant frequency of the network is significantly lower (54%) than the lowest operating speed. Calculated maximum magnification factors confirm this situation.

Case 2, A High Risk Diesel Installation

A 135 HP at 1,800 RPM, 6 cylinder, 2 cycle diesel engine will be tested on an engine dynamometer. An MCRT® 28061T(6-3) 6,000 LB-IN torquemeter is used to measure torque and speed. Power will be absorbed by an eddy current brake over the speed range from 700 to 2,500 RPM. The following data summarizes installation characteristics:

J1 = 0.75 LB-IN SEC^2
J2 = 6.6 LB-IN SEC^2
K = 2,430,000 LB-IN/RADIAN (see Bulletin 761)
Ff, minimum = 700 RPM X 6* = 4,200 CPM
Ff, maximum = 2,500 RPM X 6* = 15,000 CPM

**Forcing frequency out of a 2 cycle IC engine is the product of shaft speed and the number of cylinders.*

Using Equations 1 and 2 to calculate the shaft network resonant frequency and magnification yields the following results:

Fr = 18,139 CPM (the equal forcing frequency occurs at 3,023 RPM)
Maximum Possible Magnification at 700 RPM = 1.06
Maximum Possible Magnification at 2,500 RPM = 3.16

Because the maximum operating speed is close to resonance, the installation as described will have a high risk of failure. To avoid this, the system resonant frequency must be reduced, preferably to half (or less) of the lowest forcing frequency. Alternately, the resonant frequency could be increased to 2.5 (or more) times the highest forcing frequency.

In this case, it is impractical to significantly increase the system resonant frequency, i.e., the inherent inertias cannot be reduced and the torquemeter has an extremely high stiffness for its size. The only practical approach is to reduce the resonant frequency by decreasing the shaft stiffness and/or increasing system inertias.

Since the MCRT® 28061T(6-3) torquemeter is extremely stiff, substituting an MCRT® 28004T(6-3) torquemeter will significantly lower the resonant frequency. Its stiffness is 515,000 LB-IN/RADIAN (see Bulletin 761). From equation 1, its use will reduce the resonant frequency to 8,351 CPM (or 1,392 RPM). That resonance

© 2017 S. Himmelstein and Company—all rights reserved

is within the operating speed range and could result in destructive torque multiplications. Therefore, in addition to reducing the shaft stiffness, it is necessary to increase the system inertia.

Using Equation 3 to calculate the driver inertia required to reduce the resonant frequency to 1,800 CPM (300 RPM), yields a negative inertia. That means it is not possible to achieve the desired resonance by simply adding inertia to the driver side. The best way out of this dilemma is to add a torsionally "soft" dynamometer coupling shaft and, if needed, to add inertia on the driver side. A reasonable selection is the Spicer 15-50 dynamometer shaft which has a stiffness of 98,220 LB-IN /RADIAN and maximum ratings of 7,680 LB-IN and 4,500 RPM. The equivalent network stiffness for this shaft and the MCRT 28004T(6-3) torquemeter may be calculated from Equation 7. It is 82,488 LB-IN/RADIAN.

The installation modified with this "soft" shaft and using the MCRT® 28004T torquemeter has a resonant frequency (from Equation 1) of 3,342 CPM. At the lowest speed the magnification factor is 1.73. Thus, the resonant frequency is still too high to be absolutely safe. It is necessary to add inertia to obtain a safe, 1,800 CPM (300 RPM) resonant frequency. Equation 3 is again used to calculate the driver inertia needed. That value is 3.58 LB-IN SEC^2. The required minimum additional inertia becomes 3.58 less 0.75 or 2.83 LB-IN SEC^2.

Assuming a 12" diameter steel disc, Equation 5 indicates that 1.9" of length will produce the desired inertia. Of course, the resulting assembly should be dynamically balanced and fitted with safety covers.

By way of summary, this critical application required both a significant reduction of network stiffness and increased inertia to obtain safe operating conditions — torsional resonance equal to less than half the lowest forcing frequency. The modified system characteristics are summarized below:

J1 = 3.58 LB-IN SEC^2
J2 = 6.6 LB-IN SEC^2
K = 82,488 LB-IN/RADIAN
Fr = 1,800 CPM (the equal forcing frequency occurs @ 300 RPM)
Ff, minimum = 4,200 CPM
Ff, maximum = 15,000 CPM
Maximum Possible Magnification @ 4,200 CPM (700 RPM) = 0.23
Maximum Possible Magnification @ 15,000 CPM (2,500 RPM) = 0.01

Case 3, A Variable Frequency Motor Driveline

A 15 HP, 4 pole, a-c motor with variable frequency speed control package is to be tested on a dynamometer over the speed range from 90 to 1,800 RPM (corresponds to 3 Hz to 60 Hz excitation). The drive has current limiting, which in turn, limits the maximum starting torque to 175% of rated or, 920 LB-IN. An MCRT® 28002T (1-3) 1,000 LB-IN torquemeter measures torque and speed (see Note). The absorber is an eddy current brake. The following data summarizes the installation characteristics:

J1 = 0.48 LB-IN SEC^2
J2 = 0.71 LB-IN SEC^2
K = 70,100 LB-IN/RADIAN (see Bulletin 761)
Ff, minimum = 3 CPS X 60 SEC/MIN X 2* = 360 CPM
Ff, maximum = 60- CPS X 60 SEC/MIN X 2* = 7,200 CPM

**Forcing frequency out of an a-c motor is twice the input power frequency.*

Using Equations 1 and 2 to calculate the shaft network resonant frequency and maximum possible magnification factors yields the following results:

Fr = 4,724 CPM (equal forcing frequency occurs at 39.37 Hz input or 1,181 RPM)
Maximum Possible Magnification @ 3 Hz input = 1.01
Maximum Possible Magnification @ 60 Hz input = 0.76

Because the resonant frequency falls in the operating range, the installation has a high risk of failure. The preferred solution is to reduce the resonant frequency to one-half or less the lowest forcing frequency. In this case, to 180 CPM or less. One approach is to reduce shaft stiffness. Substituting the above values in Equation 4, indicates the shaft stiffness must be reduced to 101.75 LB-IN/RADIAN, assuming the inertias remain unmodified. Inserting a torsion spring with that stiffness will produce the desired change.

A one-inch diameter torsion rod will handle the required torques. Substituting that diameter and the required stiffness in Equation 6 yields a required spring length of 11,578". Clearly, this is an impractical approach. Similarly, if one calculates the inertia required to reduce the system resonance to 180 CPM, the inertias are totally impractical (about 395 LB-IN SEC^2 for both driver and load) for the physical size of the motor, absorber and torquemeter.

The only alternative is to raise the resonant frequency above the operating range - to at least 2.5 times the highest forcing function or, to 18,000 CPM. Again, using Equation 4 reveals the system spring constant must be equal to or greater than 1,017,548 LB-IN/RADIAN. This can be accomplished by substituting a very stiff torquemeter, such as the MCRT® 28060T(2-3), for the MCRT® 28002T. The modified system characteristics are summarized as follows:

J1 = 0.48 LB-IN SEC^2
J2 = 0.71 LB-IN SEC^2
K = 1,375,000 LB-IN/RADIAN (see Bulletin 761)
Ff, minimum = 360 CPM
Ff, maximum = 7,200 CPM
Fr = 20,924 CPM
Fr/Ft Max = 2.91
Maximum Possible Magnification @ 360 CPM = 1.00

© 2017 S. Himmelstein and Company—all rights reserved

Maximum Possible Magnification @ 7,200 CPM = 1.13

Maximum Possible Magnification @ 14,400 CPM*=1.90

**Second harmonic of 7,200 CPM*

By way of summary, the most practical solution to this problem was to raise resonance well above the highest forcing frequency — 2.9 times. The relatively high magnification factor at 14,400 CPM is acceptable because the magnitude of forcing function harmonic input is substantially less than the magnitude of the fundamental.

NOTE:

When started across the line without current limiting, a-c motors can develop several times their rated torque. In the **Figure 2** dynamometer system, the motor starting torque accelerates two major system inertias; **J1** and **J2**.
Under these conditions the torque seen by the torquemeter is:

(Starting torque developed by motor) X (J2/(J1 + J2))

For across-the-line starting without current limiting, **the torquemeter's full-scale rating should be equal to or higher than this value. If it is not, a failure may result.**

© 2017 S. Himmelstein and Company—all rights reserved

APPENDIX V

SERIAL COMMUNICATIONS FOR THE BEARINGLESS TORQUEMETERS

This specification of the serial communications for the Bearingless Torquemeter is subject to change at *any* time *without* notice.

Communication Port Settings

- 8 data bits
- No parity
- No hardware / handshaking
- 1 start bit
- 1 stop bit
- 115200 baud

General conventions used in this document

- **OK** stands for the string **"OK"**
- **index** is an alphanumeric character (**A-Z or 0-9**)
- **CR** is a carriage return (**^M / 13 decimal / 0D hexadecimal / 15 octal**)
- **LF** is a line feed (**^J / 10 decimal / 0A hexadecimal / 12 octal**)
- **int** is an integer number string (**e.g. "1234"**)
- **long** is a long integer number string (**e.g. "1234567"**)
- **float** is a floating point number string (**e.g. "1234.57"**)
- **string** is a string (**e.g. "LB-IN"**)
- **hexNUM** is a hexadecimal *string* that is **NUM** characters long (**e.g. hex4 could be "8FC4"**)

General information

- All messages to and from the Bearingless Torquemeter are terminated with a **CR** or **LF**.
  - The default termination character is **CR**.
- To set a value on the Bearingless Torquemeter, find the message that retrieves the data you want to change. Then append to that message the desired value of the parameter. The Bearingless Torquemeter should respond with "OK".
- All hexadecimal/binary data from the Bearingless Torquemeter is in big-endian (MSB first) format.

In response to any command, the Bearingless Torquemeter returns one of the following:

- "**string**" where **string** is the data requested.
- "**OK**" operation was successful
- Some error message starting with a "**!**" character. Some common error messages include:
  - "**!BadArg**" command has a bad argument
  - "**!BadIndex**" The given index is out of range for the given command.
  - "**!PasswordProtected**" The parameter is password-protected from change.
  - "**!Unknown**" an unknown error occurred.
  - "**!xx**" Command "**xx**" is unrecognized

Examples

***ALL* messages to the Bearingless Torquemeter series start with the torquemeter's ID (or "*" for RS232) and end with a CR or a LF.**

- Retrieve data:
  Send "***DC**" to the Bearingless Torquemeter. The return message should look something like "**1234.56**".
- Retrieve the filter:
  Send "***FL**" to the Bearingless Torquemeter. The return message should be something like "07" which implies (referring to the appropriate list under the "***FL**" message) that torque has a filter of **10 Hz**.
- Set the filter to **100 Hz**:
  Refer to the list under the "***FL**" (filter) command to find that a **100 Hz** filter corresponds to the value 4. Therefore, send "***FL4**" to the Bearingless Torquemeter. The Bearingless Torquemeter should respond with "**OK**" if the operation was successful.
- Apply the positive shunt calibration signal:
  Send "***ASB**" to the Bearingless Torquemeter. To remove this signal, send "***ASA**".

© 2017 S. Himmelstein and Company—all rights reserved

Important Messages

Message	Reply	Meaning
DC	float	Current Data in Engineering units. **Read only**.
SC	float,float	• Positive and Negative scaling constants. **Read only**. The units of these numbers are Engineering-units/Raw A to D counts.
UN	string	Unit Name.
DS	float	Display Scaling • The native units (lbf - in) for the channel's data are multiplied by this number before being sent to the user. Do not change this without a corresponding change in the unit name (UN). **Only torquemeter data retrieved via the DC command is subject to this scaling.**
XC	hex4	Current hexadecimal data. **Read Only.** • Multiply by the appropriate positive/negative scaling constant (SC) to get engineering units.
XE	hex6	Current 24-bit hexadecimal data. **Read only.** (Main software version greater than 109 only) • Multiply by the appropriate positive/negative scaling constant (SC) and then divide by 256 to get engineering units.
P4	long	The tared output of the digital filter. **Read only.** • Multiply by the appropriate positive/negative scaling constant (SC) and then divide by 32768 to get engineering units.
ASindex	OK	Apply shunt. **This command returns OK *before* the requested Shunt actually gets applied.** • index: — A: Remove applied shunt signal — B: Apply positive shunt signal — C: Apply negative shunt signal
AS	int	Get Current Shunt status. • int: — 0: No Shunt applied, 4x mode — 1: Positive Shunt applied, 4x mode — 2: No Shunt applied, 4x mode (Harmless, but should never happen) — 3: Negative Shunt applied, 4x mode — 4: No Shunt applied, 2x mode — 5: Positive Shunt applied, 2x mode — 6: No Shunt applied, 2x mode (Harmless, but should never happen) — 7: Negative Shunt applied, 2x mode
TP*	float,float	Rotor temperature of both temperature sensors. **Read only**. (Main software version greater than 127 only)
TP	float	Average Rotor temperature in degrees F. **Read only**.
MXindex	int,int	Max and Min in counts. **Not directly settable**. • Multiply by the appropriate positive/negative scaling constant (SC) to get engineering units. • index: — none: return Max/Min for torque (20000 = = Full Scale) — 0: Set Max and Min to current Data
FL	int	Filter (0 - 10) (4 bits) • int: — 0: No digital filter — 1: 1000Hz 3db cutoff — 2: 500Hz 3db cutoff — 3: 200Hz 3db cutoff — 4: 100Hz 3db cutoff — 5: 50Hz 3db cutoff

© 2017 S. Himmelstein and Company—all rights reserved

Important Messages (Continued)

Message	Reply	Meaning
		— 6: 20Hz 3db cutoff — 7: 10Hz 3db cutoff — 8: 5Hz 3db cutoff — 9: 2Hz 3db cutoff — 10: 1Hz 3db cutoff
MD	string	The model of the torquemeter
FS	int	The fullscale 'counts' for this torquemeter
SN	string	The serial number of the torquemeter
AFindex	long	Frequency Analog Output setup • index: — A: Frequency output at 0 (units: mHz) — B: Frequency output at torquemeter full scale (units: mHz)
AVindex	long	Voltage Analog Output setup • index: — A: Voltage output at 0 (units: micro-Volts) — B: Voltage output at torquemeter full scale (units: micro-Volts)
PSintstring	OK	Set password protection on/off • int: — 0: Off — 1: On • string — The password for the torquemeter
PS	int	Get the password protection state • int: — 0: Off — 1: On
PCXstring1**X**string2 **X**string3	OK	Change password • The"X" represent any charactor not in any of the strings • string1: current password • string2: new password • string3: new pasword • Password is changed if and only if string1 equals the current password **AND** string2 and string3 are equal
ID	char	The ID of the torquemeter for the 485 communications
CM	int	The Communications Mode of the torquemeter • int: — 0: No Termination resistor — 1: Enable 1200 Ohm Termination resistsor during 485 Communication
TR	string	Tare Value • string — if string starts with '0' - '9', or '+': Set Tare — else: Tare Torque
CEindex	float	Calibration Values • index: — A: Full Scale Value (units: lbf-in) — B: Positive Load Value (units: lbf-in) — C: Negative Load Value (units: lbf-in) — D: Positive Shunt Calibration Value (units: lbf-in) — E: Negative Shunt Calibration Value (units: lbf-in)

© 2017 S. Himmelstein and Company—all rights reserved

Important Messages (Continued)

Message	Reply	Meaning
CLindex	OK	Perform the specified calibration • index: — A: Perform a Zero Calibration — B: Perform a Positive Load Span Calibration — C: Perform a Negative Load Span Calibration — D: Perform a Positive Shunt Span Calibration (assumes the positive shunt is applied) — E: Perform a Negative Shunt span Calibration (assumes the negative shunt is applied)
@@	OK	Save configuration to flash on both the I/O board and Main processor board
IAindex	int	Input Pin definition • index: — A: Pin A input action — B: Pin B input action — C: Pin E input action — D: Pin F input action — E: Pin G input action — F: Pin H Output action — G: Pin C Output action • int: — 1: Positive Cal — 2: Negative Cal — 3: Reset Max/Min — 4: Tare — 5: Clear Tare — 6: Max data output (Main software version greater than 107 only) — 7: Min data output (Main software version greater than 107 only) — 8: Data OK output — 9: Frequency output — 10: Toggle Range 107 (Main software version greater than 107 only)
AI	long	Switch Ranges • **After Power-up this variable is set to 0** • Set Range — 0: High Range — 1: Low Range
ACindex	long	User Voltage Analog Output Tweak in deci D/A counts • index: — A: Tweak for + 10V (units: deci-D/A-counts) — B: Tweak for + 5V (units: deci-D/A -counts) — C: Tweak for 0V (units: deci-D/A-counts) — D: Tweak for -5V (units: deci-D/A-counts) — E: Tweak for -10V (units: deci-D/A-counts)
AOindex	long	Full Scale analog output Ratios • index: — A: set Analog Output Full Scale to AO[0]* Full-Scale (High Range) **DO NOT CHANGE THIS FROM 1.000** — B: set Analog Output Full Scale to AO[1]* Full-Scale (Low Range)

S. Himmelstein and Company

Designing and Making the World's Best Torque Instruments since 1960

2490 Pembroke Avenue, Hoffman Estates, IL 60169 USA • Tel: 847-843-3300 • Fax: 847-843-8488 • www.himmelstein.com